TRADITIONAL WALL MOUNTED POTFILLER - CROSS HANDLE

3150

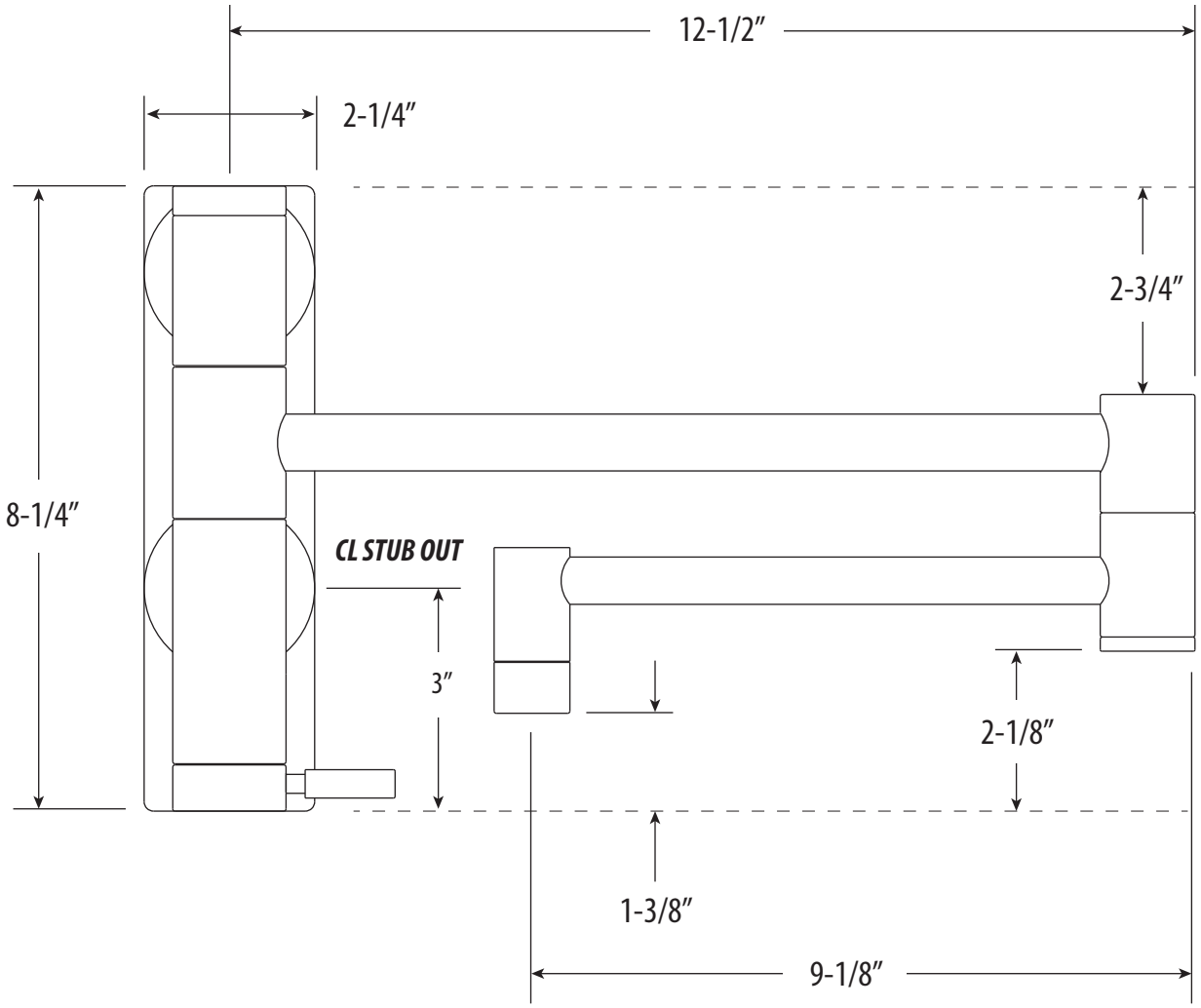

DIMENSIONS MAY VARY AND ARE SUBJECT TO CHANGE. NO RESPONSIBILITY IS ASSUMED FOR USE OF SUPERCEDED OR VOIDED DATA

41180 Raintree Court • Murrieta, CA 92562 • 1-888-304-0660 • Fax 951-304-0525 • www.waterstoneco.com

REVISED: 11-10-22